SEIKO OPTICAL

Email： sales@seiko-optic.com

SPECIFICATIONS

Parameter of Lens			Photo (Just for Reference)
Name		5Mega pixel/IR	
Model No		SRV0615MP-5C	
Focal-Length(mm)		6 ~ 15	
Aperture(D/f')		F1.4	
Mount		C	
Format(inch)		2/3"	
Field of View(H-fov)		77°～ 34.4°	
Mega pixel		5	
Weight(g)		200	
M.O.D(m)		0.3	
Operation	**Focus**	Manual	
	Zoom	Manual	
	Iris	DC-Iris	

Size

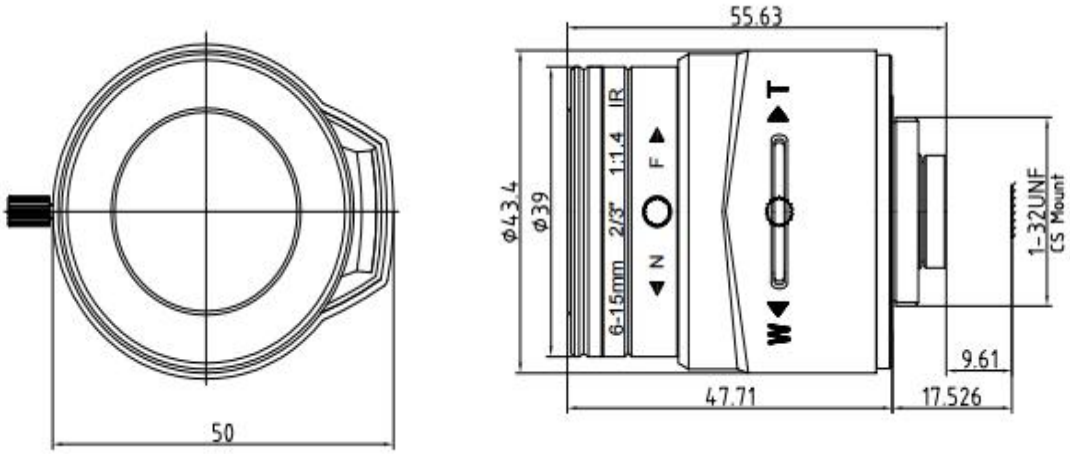

Tolerance					
	Dimension	0-10	10-30	30-100	**Unit**
	Tolerance	±0.10	±0.20	±0.30	**mm**

CE RoHS **ISO 9001 Quality System GJB9001A**